AVERY DENNISON MARKETING SPECIFICATION

THE SUBJECT MATTER DISCLOSED HEREIN EMBODIES PROPRIETARY INFORMATION WHICH IS THE CONFIDENTIAL PROPERTY OF THE AVERY DENNISON CO. NONE OF WHICH SHALL BE COPIED, REPRODUCED, DISCLOSED TO OTHERS, PUBLISHED OR USED IN WHOLE OR IN PART, FOR ANY PURPOSE OTHER THAN THAT FOR WHICH IT IS BEING MADE AVAILABLE WITHOUT THE EXPRESS ADVANCE WRITTEN PERMISSION OF A DULY AUTHORIZED AGENT OF THE COMPANY. THIS DOCUMENT IS THE PROPERTY OF THE AVERY DENNISON CO. AND IS TO BE RETURNED TO THE COMPANY ON DEMAND.

HISTORY

REV.	DATE	DESCRIPTION
F	01.02.13	UPDATED TO NEW FORMAT; DELETED BALLOON # 8 DUE TO IT BEING A REF. DIM

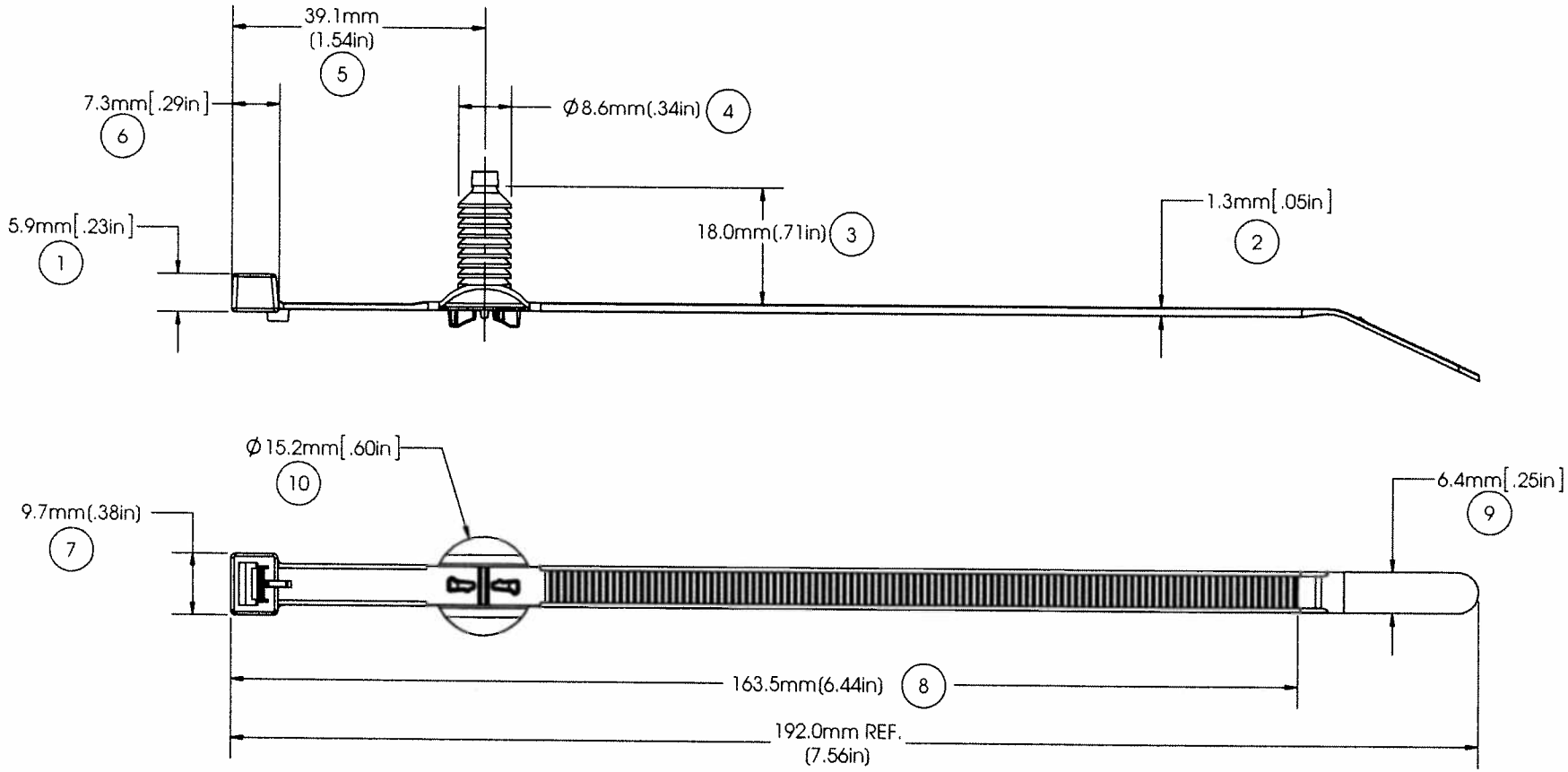

APPLICATION:	6.4MM - 7.0MM HOLE
TENSILE STRENGTH:	50 LBF / 22.7 KGF MIN.
OPERATING TEMP RANGE:	-40°F (-40°C) TO 220°F (105°C)
WEIGHT:	.074 OZ./2.11 GRAMS
BUNDLE DIAMETER:	Ø6.35MM TO Ø47.6MM
TOOL:	12001 - HAND INSTALLATION TOOL 12500 - PNUEM. INSTALLATION TOOL
TOOL TENSION SETTING:	6 - 8
PACKAGING:	500/BAG, 10 BAGS/MASTER

APPROVALS: ENG. APPR. 1/3/13 Q.A. APPR. 1/3/13

SPECIFIED TOLERANCES ARE:
.XX ± .03 IN. .X ± .7 MM
.XXX ± .01 IN. .XX ± .25 MM
ANGULAR: ± 2°

MATERIAL
IMPACT MODIFIED NYLON 6/6
HEAT STABILIZED

COLOR
BLACK

AVERY DENNISON
FASTENER DIVISION
FITCHBURG, MA 01420 U.S.A.
TEL. 1-800-225-5913
FAX. 978-353-8157

DESCRIPTION
FIR TREE ON STRAP

STOCK NO. 10711-0

REV. F

5 4 3 2 1